Goalkeeper Robotic Arm

Team Number: 17
Menna Walaa **ID:** 55-0908, Eman Elezaby **ID:** 55-5538, Farah Elzeky **ID:** 55-7554,
Khadija Sherif **ID:** 55-2841, Nabil Mohamed **ID:** 55-1543, Seif Alhennawy **ID:** 55-18172

1 Literature Review

1.1 Introduction

Vision-based robotic systems play a significant role in applications requiring rapid decision-making and precise actuation. Robotic soccer and ball interception tasks present particular challenges due to the high velocity of the object and limited reaction time. A goalkeeper robotic arm with one degree of freedom (1DoF) depends on accurate visual detection and reliable motion prediction to determine the rotational movement necessary to block an incoming ball. The effectiveness of such systems relies on the integration of image processing techniques with embedded motor control hardware.

1.2 Goalkeeper Robotics and Ball Interception

Recent research demonstrates the feasibility of robotic ball interception using visual feedback. Harikumar et al. [1] proposed a colored ball tracking approach for humanoid goalkeeper robots, emphasizing fast image processing for dynamic environments. Santos et al. [2] developed a vision-based robotic catching system that combined trajectory prediction with real-time actuation to enhance interception accuracy.

Similarly, Patel et al. [3] investigated robotic arm mechanisms for blocking fast-moving balls, confirming that low-degree-of-freedom systems can perform effectively when supported by accurate trajectory estimation. These studies highlight that reliable detection and predictive control are fundamental to goalkeeper robotic performance.

1.3 Image Processing Techniques for Ball Detection

Classical image processing techniques remain widely used in real-time embedded applications due to their computational efficiency. HSV color space segmentation is frequently employed to isolate a colored ball from the background [4]. By selecting appropriate threshold ranges, the ball region can be distinguished even under moderate illumination variations.

To improve segmentation quality, morphological operations such as erosion and dilation are applied to eliminate noise and refine object boundaries. After segmentation, contour detection or the Hough Circle Transform can be used to determine the center coordinates of the ball [5]. These techniques provide geometric features necessary for tracking while maintaining low processing latency.

1.4 Tracking and Trajectory Prediction

Detection alone is insufficient for interception; motion estimation is also required. Tracking algorithms estimate the ball position across consecutive frames to compute velocity and predict future positions. The Kalman filter is commonly applied in robotic vision systems to smooth measurements and model motion dynamics [6].

For short-distance goalkeeper applications, linear motion models are generally adequate to approximate the ball's trajectory [2]. The predicted interception point can then be translated into an angular displacement command for the 1DoF robotic arm. Such predictive filtering significantly improves response timing and blocking accuracy.

1.5 Hardware and Electronics Implementation

The successful implementation of a goalkeeper robotic arm depends on efficient integration between vision processing and motor actuation. Embedded platforms such as Raspberry Pi can execute OpenCV-based algorithms including filtering, segmentation, and tracking [4]. These platforms offer sufficient computational capability for real-time performance in compact systems.

Servo motors are typically used for arm rotation due to their precise angular positioning. Arduino microcontrollers generate Pulse Width Modulation (PWM) signals to control servo movement. In many implementations, Proportional–Integral–Derivative (PID) controllers are employed to reduce steady-state error and enhance stability [7]. The coordination between image processing output and motor control circuitry enables fast and accurate response to predicted ball positions.

1.6 Deep Learning-Based Detection

Deep learning approaches, particularly Convolutional Neural Networks (CNNs), have recently been explored for object detection tasks including ball tracking [8]. These methods improve robustness under complex backgrounds and lighting conditions. However, their computational requirements are higher than classical techniques, which may limit their suitability for lightweight embedded systems. Consequently, traditional image processing methods remain practical for low-cost 1DoF goalkeeper implementations.

2 Proposed Project Plan

The proposed goalkeeper system follows a sequence of image processing and control steps to detect a moving ball and move a robotic goalkeeper to block it.

1. **Image Acquisition**
   A camera connected to the Raspberry Pi captures continuous frames of the goal area where the ball movement occurs.

2. **Image Pre-processing**
   The captured frames are processed to improve image quality. Image filtration techniques such as Gaussian filtering are applied to reduce noise, and the image may be converted from RGB to HSV or grayscale to simplify further processing.

3. **Ball Segmentation**
   The ball is separated from the background using segmentation techniques. Color thresholding is applied to isolate the ball based on its color, followed by morphological operations such as erosion and dilation to remove noise and refine the detected region.

4. **Ball Detection and Localization**
   After segmentation, contour detection is used to identify the ball. The centroid of the detected contour is calculated to determine the ball position within the image frame.

5. **Motion Analysis and Decision Making**
   Using the detected ball positions across consecutive frames, the system estimates the ball movement and determines the appropriate position for the goalkeeper to intercept the ball.

6. **Actuation**
   The Raspberry Pi sends control signals to an Arduino microcontroller, which drives the motors or servos responsible for moving the robotic goalkeeper to block the ball.

3 List of Hardware Components

Component	**Quantity**	**Price (EGP)**
Raspberry Pi 5 (4GB)	1	5950
Raspberry Pi Camera Module V2 (8MP IMX219)	1	800
Arduino UNO Rev3 (Clone)	1	450
FS5103R 360° Continuous Servo Motor	1	350
Acrylic Case for Raspberry Pi Camera	1	95

Table 1: Hardware components required for the system

4 System Proposed DiagramS

4.1 Flow of Data Diagram

The system block diagram illustrates the architecture of the goalkeeper robotic arm. A camera captures image frames of the incoming ball and sends them to the Raspberry Pi, where image processing and color-based ball tracking are performed. Based on the detected ball position, the Raspberry Pi generates control commands and transmits them to the Arduino microcontroller via serial communication. The Arduino outputs PWM and digital signals to the motor driver, which actuates the robotic arm motors to block the ball. A regulated power supply provides the required logic and motor voltages to all system components.

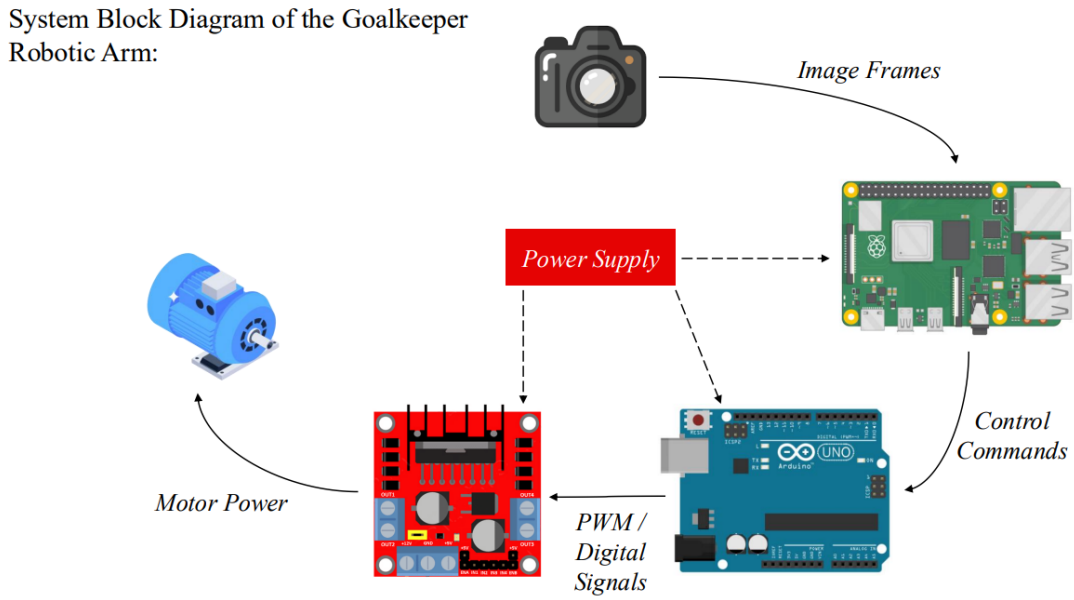

Figure 1: Schematic Diagram

4.2 Circuit Design

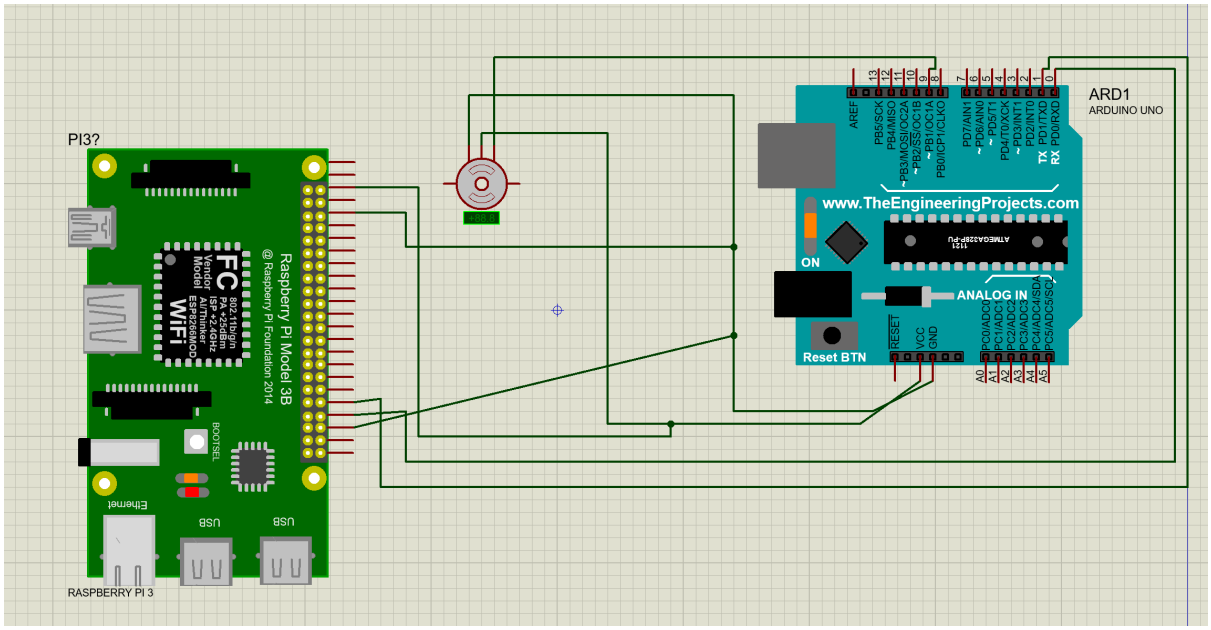

Figure 2: Circuit Design

4.3 Hardware Design

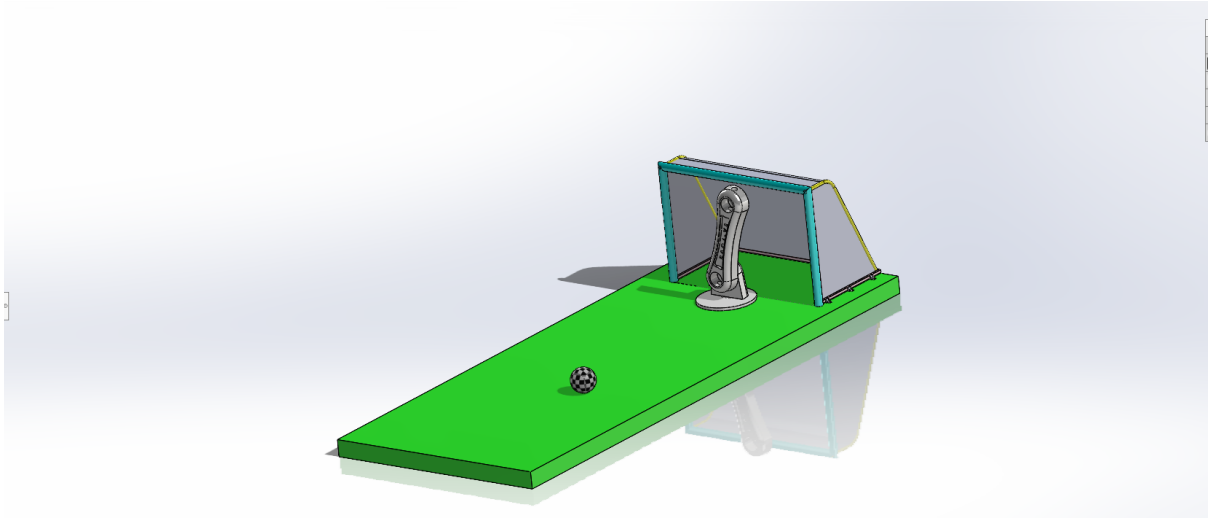

Figure 3: Solidworks Design

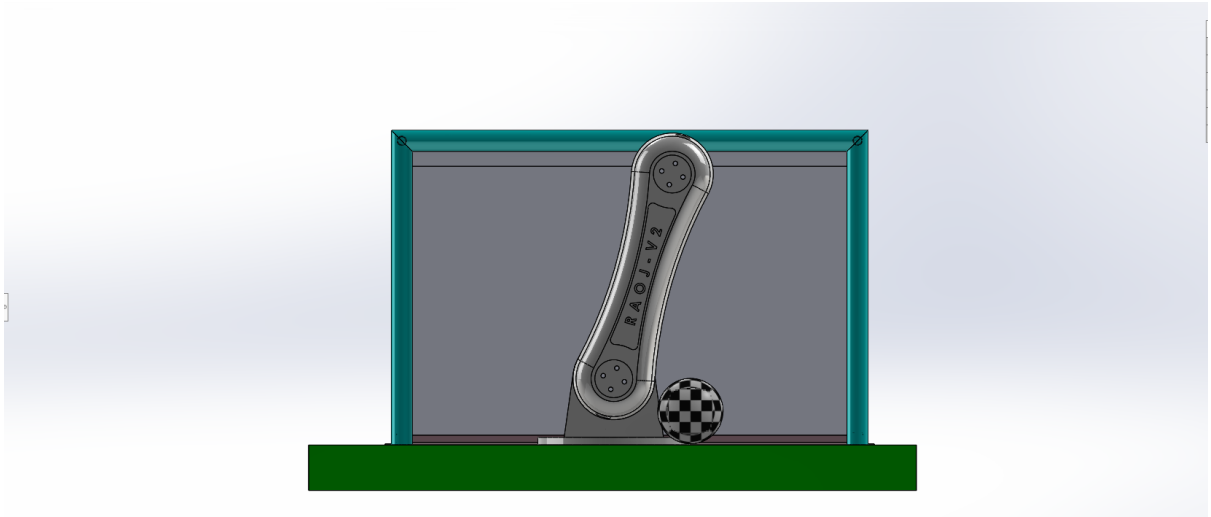

Figure 4: Solidworks Design

References

[1] A. Harikumar, S. K. Saha, and A. R. Sharma, "Colored Ball Position Tracking Method for Goalkeeper Humanoid Robot Soccer," 2020.

[2] D. Santos, P. Ribeiro, and A. Lopes, "Vision-Based Robotic Ball Catching Using Motion Prediction," *Robotics and Autonomous Systems*, vol. 148, 2021.

[3] M. Patel, J. Li, and R. Kumar, "Robotic Arm Interception of Fast-Moving Balls," *IEEE Access*, vol. 10, 2022.

[4] M. A. Khan, S. Rehman, and T. Hussain, "Real-Time Ball Detection Using Computer Vision Techniques," *Sensors*, vol. 23, no. 8, 2023.

[5] R. Patel and K. Sharma, "Ball Detection and Tracking Using Hough Transform and Kalman Filter," *IEEE Access*, 2022.

[6] J. Lee and H. Kim, "Vision-Based Moving Object Tracking Using Kalman Filter for Robotic Applications," *Electronics*, 2021.

[7] S. M. Alim and R. S. Kumar, "Embedded Servo Control for Robotic Arms Using Arduino and PID Controllers," *IEEE Embedded Systems Letters*, 2022.

[8] Y. Zhang, L. Chen, and H. Wang, "Deep Learning-Based Ball Detection for Real-Time Sports Applications," *IEEE Access*, 2023.